Fire is Everyone's Fight™

SAUGATUCK TOWNSHIP FIRE DISTRICT

Proudly serving : Douglas | Saugatuck | Saugatuck Township

Fire Code Board of Appeals

6736 Saugatuck Beach Rd.

Northshores of Saugatuck LLC

Presented by Chief Greg Janik and Deputy Chief Chris Mantels

January 27th, 2020 – 3:00pm

Fire Department Plan Reviewers

Saugatuck Township Fire District (Fire District) Chief Greg Janik, and Deputy Chief Chris Mantels are highly qualified to conduct plan reviews and interpret fire codes.

- National Fire Protection Association (NFPA) & State of Michigan – Certified Fire Inspector 1's (2 of 3,400 in the World)
- NFPA Certified Fire Inspector 2's (2 of 774 in the World)
- NFPA Certified Plans Examiner's (2 of 1,203 in the World)
- Public Act 54 – Fire Protection System Plan Reviewers
- Public Act 54 – Fire Protection System Inspectors
- Over 30 years of combined Fire Service Experience

Board of Appeals - Qualifications

- Board (members) shall have responsibility for the operation and maintenance of fire protection and emergency medical services throughout the District or take action with respect to any other matters which may arise from time to time that pertain to fire or emergency medical services protection in the District.
  - Eric Beckman – 13 years as Fire Administrative Board member since October 2007. Current Board of Appeals Member
  - Aaron Miller– 2 years as Fire Administrative Board member since January 2018. Current Board of Appeals Member
  - Jane Verplank –7 years as Fire Administrative Board member since February 2013. Current Board of Appeals Member. Serves on the Allegan County 911 Policy and Procedure Board for Public Safety matters since 2015

Mission Statement

THE MISSION OF THE SAUGATUCK TOWNSHIP FIRE DISTRICT IS TO MINIMIZE COMMUNITY RISKS AND IMPROVE THE QUALITY OF LIFE FOR ALL PERSONS WITHIN THE SAUGATUCK TOWNSHIP FIRE DISTRICT

Northshores of Saugatuck - Site View

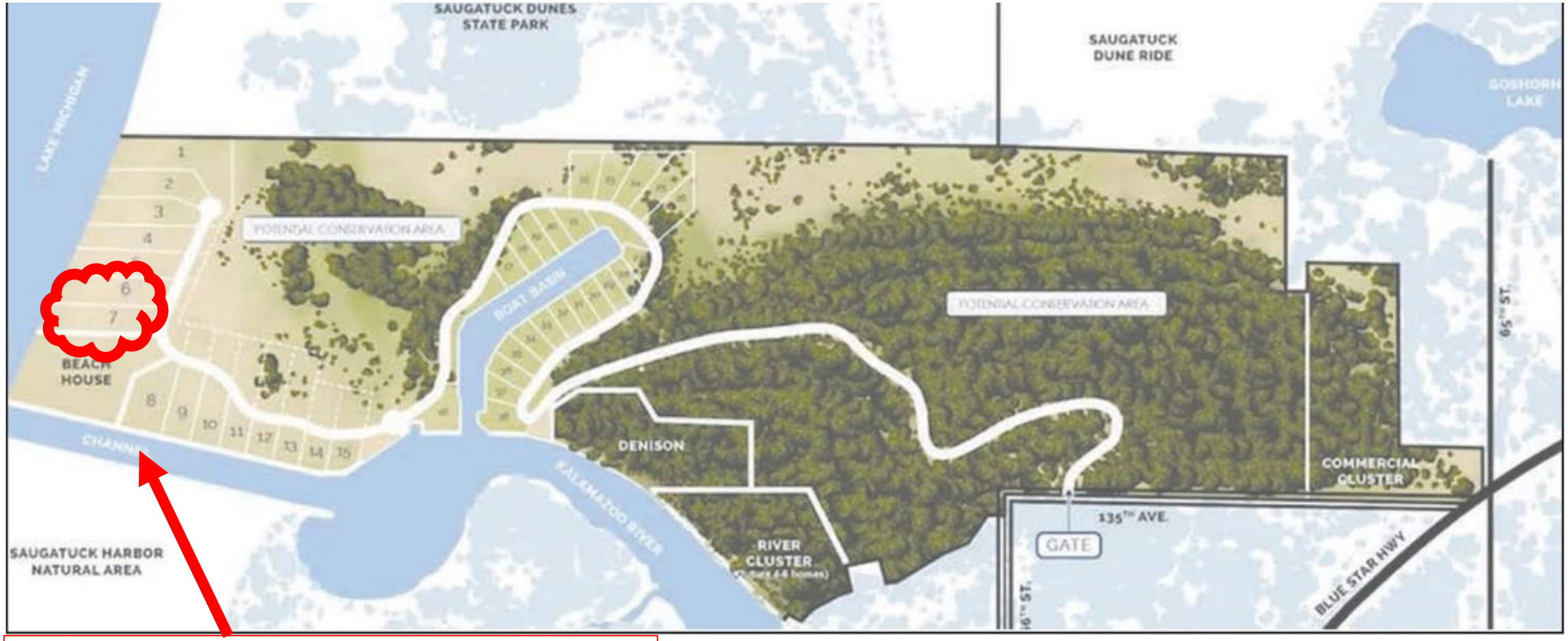

The two existing homes on Lots 6 & 7 have NO fire protection water supplies

6736 Saugatuck Beach Road (Lot 15) - Site Plan

Square Footage

- 1st Floor - +/- 2,900ft^2
- Garage - +/- 1,000ft^2
- 2nd Floor - +/- 2,400ft^2

Total

+/- **6,300ft^2**

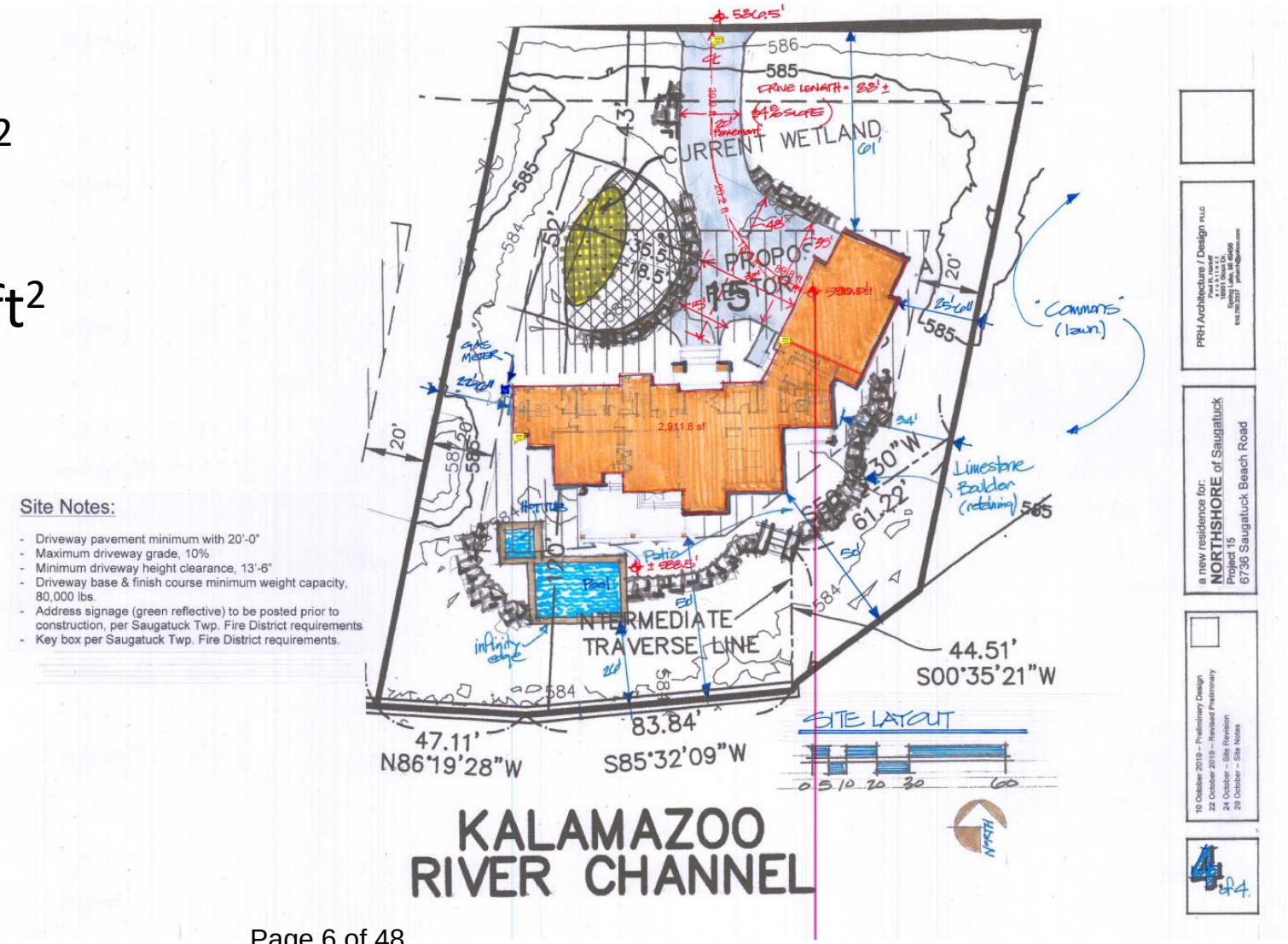

6736 Saugatuck Beach Road (Lot 15) - Site View

6736 Saugatuck Beach Road – Plan Review

- As indicated in our plan review, the dry hydrants within 400 feet of the dwelling are only being considered for this particular home on Lot 15, at 6736 Saugatuck Beach Road.

- The balance of the Northshores of Saugatuck development, including other parcels and proposed dwellings, has not been reviewed yet, and will be reviewed on a case by case basis.

April 18th, 2017 Letter – re: Water Supply Concerns

- Our concerns, and future requirements were made clear to developers representative Scott Bosgraaf in April of 2017.
  - "2,000 GPM was specified for homes 4,801-6,200 ft^2"
  - "A static (dry hydrant) water supply is not recommended"
  - "The engineer may recommend the installation of a UL listed NFPA 20 compliant fire pump. This will provide a pressurized water supply system and reduce the number of pumpers required to provide necessary fire protection within the development."
  - "Distributing and spacing of fire hydrants require a hydrant every 400 feet"

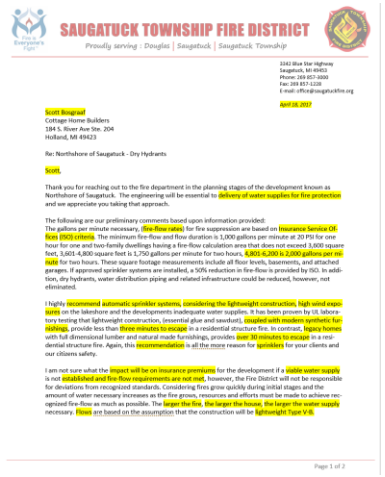

SAUGATUCK TOWNSHIP FIRE DISTRICT

Proudly serving : Douglas | Saugatuck | Saugatuck Township

3142 Blue Star Highway
Saugatuck, MI 49453
Phone: 269-857-3000
Fax: 269-857-1228
E mail: office@saugatuckfire.org

April 18, 2017

Scott Bosgraaf
Cottage Home Builders
184 S. River Ave Ste. 204
Holland, MI 49423

Re: Northshore of Saugatuck - Dry Hydrants

Scott,

Thank you for reaching out to the fire department in the planning stages of the development known as Northshore of Saugatuck. The engineering will be essential to delivery of water supplies for fire protection and we appreciate you taking that approach.

The following are our preliminary comments based upon information provided:
The gallons per minute necessary, (fire flow rates) for fire suppression are based on Insurance Service Offices (ISO) criteria. The minimum fire-flow and flow duration is 1,000 gallons per minute at 20 PSI for one hour for one and two-family dwellings having a fire-flow calculation area that does not exceed 3,600 square feet. 3,601-4,800 square feet is 1,750 gallons per minute for two hours. 4,801-6,200 is 2,000 gallons per minute for two hours. These square footage measurements include all floor levels, basements, and attached garages. If approved sprinkler systems are installed, a 50% reduction in fire-flow is provided by ISO. In addition, dry hydrants, water distribution piping and related infrastructure could be reduced, however, not eliminated.

I highly recommend automatic sprinkler systems, considering the lightweight construction, high wind exposure on the lakeshore and the developments inadequate water supplies. It has been proven by UL laboratory testing that lightweight construction, (essential glue and sawdust), coupled with modern synthetic furnishings, provide less than three minutes to escape in a residential structure fire. In contrast, legacy homes with full dimensional lumber and natural made furnishings, provides over 30 minutes to escape in a residential structure fire. Again, this recommendation is all the more reason for sprinklers for your clients and our citizens safety.

I am not sure what the impact will be on insurance premiums for the development if a viable water supply is not established and fire flow requirements are not met, however, the Fire District will not be responsible for deviations from recognized standards. Considering fires grow quickly during initial stages and the amount of water necessary increases as the fire grows, resources and efforts must be made to achieve recognized fire-flow as much as possible. The larger the fire, the larger the house, the larger the water supply necessary. Flows are based on the assumption that the construction will be lightweight Type V-B.

Page 1 of 2

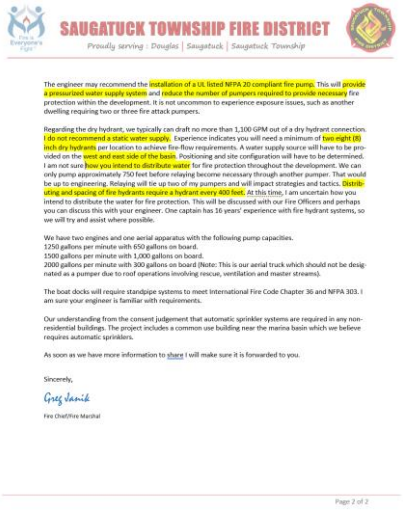

SAUGATUCK TOWNSHIP FIRE DISTRICT

Proudly serving : Douglas | Saugatuck | Saugatuck Township

The engineer may recommend the installation of a UL listed NFPA 20 compliant fire pump. This will provide a pressurized water supply system and reduce the number of pumpers required to provide necessary fire protection within the development. It is not uncommon to experience exposure issues, such as another dwelling requiring two or three fire attack pumpers.

Regarding the dry hydrant, we typically can draft no more than 1,100 GPM out of a dry hydrant connection. I do not recommend a static water supply. Experience indicates you will need a minimum of two eight (8) inch dry hydrants per location to achieve fire-flow requirements. A water supply source will have to be provided on the west and east side of the basin. Positioning and site configuration will have to be determined. I am not sure how you intend to distribute water for fire protection throughout the development. We can only pump approximately 750 feet before relaying become necessary through another pumper. That would be up to engineering. Relaying will tie up two of my pumpers and will impact strategies and tactics. Distributing and spacing of fire hydrants require a hydrant every 400 feet. At this time, I am uncertain how you intend to distribute the water for fire protection. This will be discussed with our Fire Officers and perhaps you can discuss this with your engineer. One captain has 16 years' experience with fire hydrant systems, so we will try and assist where possible.

We have two engines and one aerial apparatus with the following pump capacities.
1250 gallons per minute with 650 gallons on board.
1500 gallons per minute with 1,000 gallons on board.
2000 gallons per minute with 300 gallons on board (Note: This is our aerial truck which should not be designated as a pumper due to roof operations involving rescue, ventilation and master streams).

The boat docks will require standpipe systems to meet International Fire Code Chapter 36 and NFPA 303. I am sure your engineer is familiar with requirements.

Our understanding from the consent judgement that automatic sprinkler systems are required in any non-residential buildings. The project includes a common use building near the marina basin which we believe requires automatic sprinklers.

As soon as we have more information to share I will make sure it is forwarded to you.

Sincerely,

Greg Danik

Fire Chief/Fire Marshal

Page 2 of 2

SAUGATUCK TOWNSHIP FIRE DISTRICT

Proudly serving : Douglas | Saugatuck | Saugatuck Township

3342 Blue Star Highway
Saugatuck, MI 49453
Phone: 269 857-3000
Fax: 269 857-1228
E-mail: office@saugatuckfire.org

April 18, 2017

Scott Bosgraaf
Cottage Home Builders
184 S. River Ave Ste. 204
Holland, MI 49423

Re: Northshore of Saugatuck - Dry Hydrants

Scott,

Thank you for reaching out to the fire department in the planning stages of the development known as Northshore of Saugatuck. The engineering will be essential to delivery of water supplies for fire protection and we appreciate you taking that approach.

The following are our preliminary comments based upon information provided:
The gallons per minute necessary, (fire-flow rates) for fire suppression are based on Insurance Service Offices (ISO) criteria. The minimum fire-flow and flow duration is 1,000 gallons per minute at 20 PSI for one hour for one and two-family dwellings having a fire-flow calculation area that does not exceed 3,600 square feet, 3,601-4,800 square feet is 1,750 gallons per minute for two hours, 4,801-6,200 is 2,000 gallons per minute for two hours. These square footage measurements include all floor levels, basements, and attached garages. If approved sprinkler systems are installed, a 50% reduction in fire-flow is provided by ISO. In addition, dry hydrants, water distribution piping and related infrastructure could be reduced, however, not eliminated.

I highly recommend automatic sprinkler systems, considering the lightweight construction, high wind exposures on the lakeshore and the developments inadequate water supplies. It has been proven by UL laboratory testing that lightweight construction, (essential glue and sawdust), coupled with modern synthetic furnishings, provide less than three minutes to escape in a residential structure fire. In contrast, legacy homes with full dimensional lumber and natural made furnishings, provides over 30 minutes to escape in a residential structure fire. Again, this recommendation is all the more reason for sprinklers for your clients and our citizens safety.

I am not sure what the impact will be on insurance premiums for the development if a viable water supply is not established and fire-flow requirements are not met, however, the Fire District will not be responsible for deviations from recognized standards. Considering fires grow quickly during initial stages and the amount of water necessary increases as the fire grows, resources and efforts must be made to achieve recognized fire-flow as much as possible. The larger the fire, the larger the house, the larger the water supply necessary. Flows are based on the assumption that the construction will be lightweight Type V-B.

The engineer may recommend the installation of a UL listed NFPA 20 compliant fire pump. This will provide a pressurized water supply system and reduce the number of pumpers required to provide necessary fire protection within the development. It is not uncommon to experience exposure issues, such as another dwelling requiring two or three fire attack pumpers.

Regarding the dry hydrant, we typically can draft no more than 1,100 GPM out of a dry hydrant connection. I do not recommend a static water supply. Experience indicates you will need a minimum of two eight (8) inch dry hydrants per location to achieve fire-flow requirements. A water supply source will have to be provided on the west and east side of the basin. Positioning and site configuration will have to be determined. I am not sure how you intend to distribute water for fire protection throughout the development. We can only pump approximately 750 feet before relaying become necessary through another pumper. That would be up to engineering. Relaying will tie up two of my pumpers and will impact strategies and tactics. Distributing and spacing of fire hydrants require a hydrant every 400 feet. At this time, I am uncertain how you intend to distribute the water for fire protection. This will be discussed with our Fire Officers and perhaps you can discuss this with your engineer. One captain has 16 years' experience with fire hydrant systems, so we will try and assist where possible.

We have two engines and one aerial apparatus with the following pump capacities.
1250 gallons per minute with 650 gallons on board.
1500 gallons per minute with 1,000 gallons on board.
2000 gallons per minute with 300 gallons on board (Note: This is our aerial truck which should not be designated as a pumper due to roof operations involving rescue, ventilation and master streams).

The boat docks will require standpipe systems to meet International Fire Code Chapter 36 and NFPA 303. I am sure your engineer is familiar with requirements.

Our understanding from the consent judgement that automatic sprinkler systems are required in any non-residential buildings. The project includes a common use building near the marina basin which we believe requires automatic sprinklers.

As soon as we have more information to share I will make sure it is forwarded to you.

Sincerely,

Greg Janik

Fire Chief/Fire Marshal

Property Owner Meeting – April 24th, 2019

- Chief Janik, Township Trustee/Fire Board Rep. Stacey Aldrich, and Township Treasurer/Trustee Jon Helmrich met with property owner Mr. Jeff Padnos
  - Mr. Padnos was informed of the Fire District's concerns
  - Mr. Padnos was informed of the suggestion from 2017 to install a UL listed fire pump and private fire service mains to provide the best possible water supply for fire protection to the development
  - Unfortunately, Mr. Padnos stated he had not been informed by his representative, Mr. Scott Bosgraaf of the letter from April 18th, 2017 outlining the Fire District's water supply concerns

Dry Hydrant Submittal from July 2018

- 2017 letter indicated two 8” dry hydrants are needed to achieve required fire flow(s)

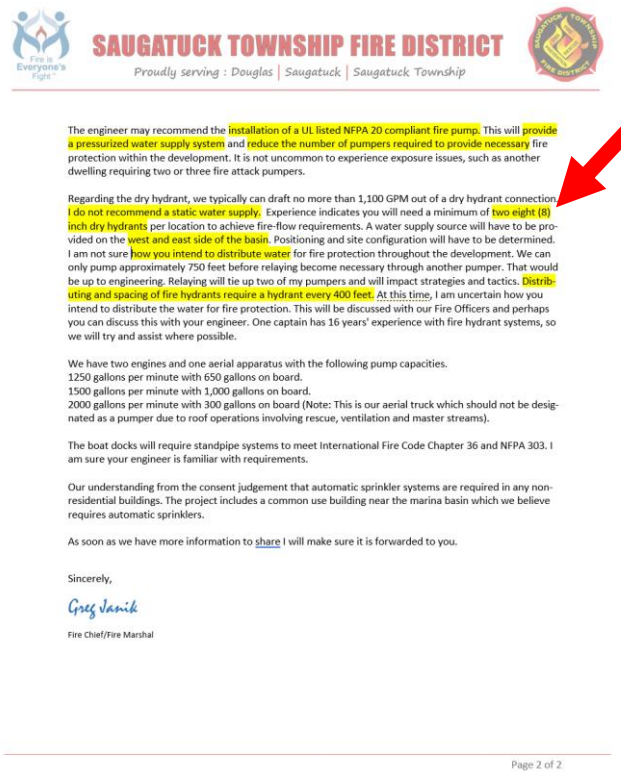

SAUGATUCK TOWNSHIP FIRE DISTRICT

Proudly serving : Douglas | Saugatuck | Saugatuck Township

The engineer may recommend the installation of a UL listed NFPA 20 compliant fire pump. This will provide a pressurized water supply system and reduce the number of pumpers required to provide necessary fire protection within the development. It is not uncommon to experience exposure issues, such as another dwelling requiring two or three fire attack pumpers.

Regarding the dry hydrant, we typically can draft no more than 1,100 GPM out of a dry hydrant connection. I do not recommend a static water supply. Experience indicates you will need a minimum of two eight (8) inch dry hydrants per location to achieve fire-flow requirements. A water supply source will have to be provided on the west and east side of the basin. Positioning and site configuration will have to be determined. I am not sure how you intend to distribute water for fire protection throughout the development. We can only pump approximately 750 feet before relaying become necessary through another pumper. That would be up to engineering. Relaying will tie up two of my pumpers and will impact strategies and tactics. Distributing and spacing of fire hydrants require a hydrant every 400 feet. At this time, I am uncertain how you intend to distribute the water for fire protection. This will be discussed with our Fire Officers and perhaps you can discuss this with your engineer. One captain has 16 years' experience with fire hydrant systems, so we will try and assist where possible.

We have two engines and one aerial apparatus with the following pump capacities.
1250 gallons per minute with 650 gallons on board.
1500 gallons per minute with 1,000 gallons on board.
2000 gallons per minute with 300 gallons on board (Note: This is our aerial truck which should not be designated as a pumper due to roof operations involving rescue, ventilation and master streams).

The boat docks will require standpipe systems to meet International Fire Code Chapter 36 and NFPA 303. I am sure your engineer is familiar with requirements.

Our understanding from the consent judgement that automatic sprinkler systems are required in any non-residential buildings. The project includes a common use building near the marina basin which we believe requires automatic sprinklers.

As soon as we have more information to share I will make sure it is forwarded to you.

Sincerely,

Greg Janik

Fire Chief/Fire Marshal

Page 2 of 2

- Developer submittals appear to indicate 6”, then altered to indicate 8”

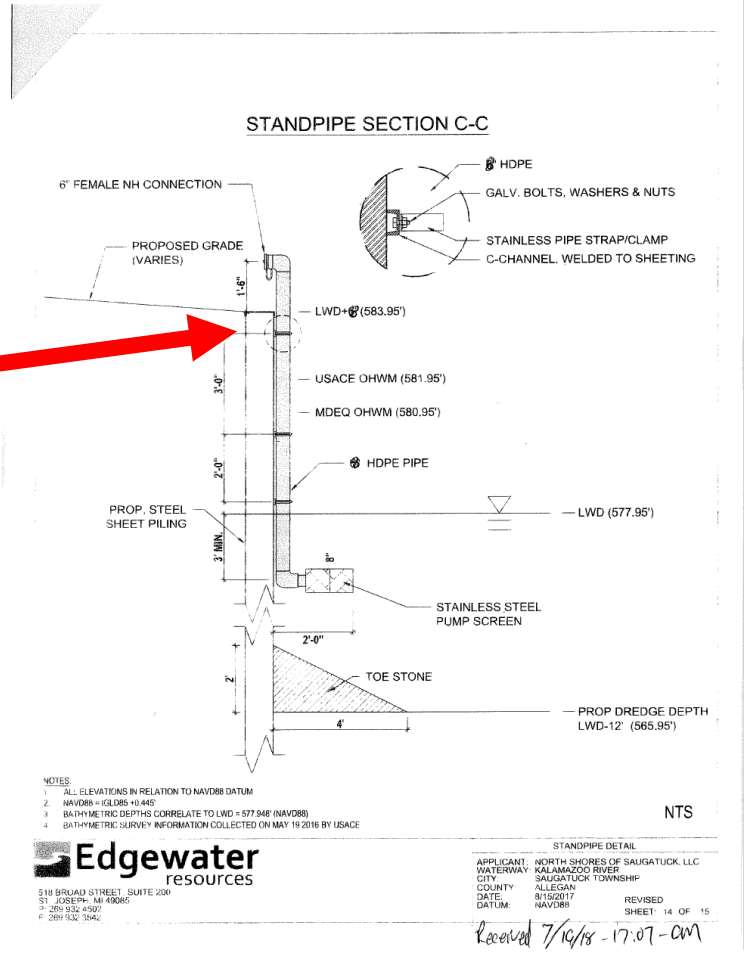

- However, developer installed two 6” dry hydrants that have not been approved by the Authority Having Jurisdiction

STANDPIPE SECTION C-C

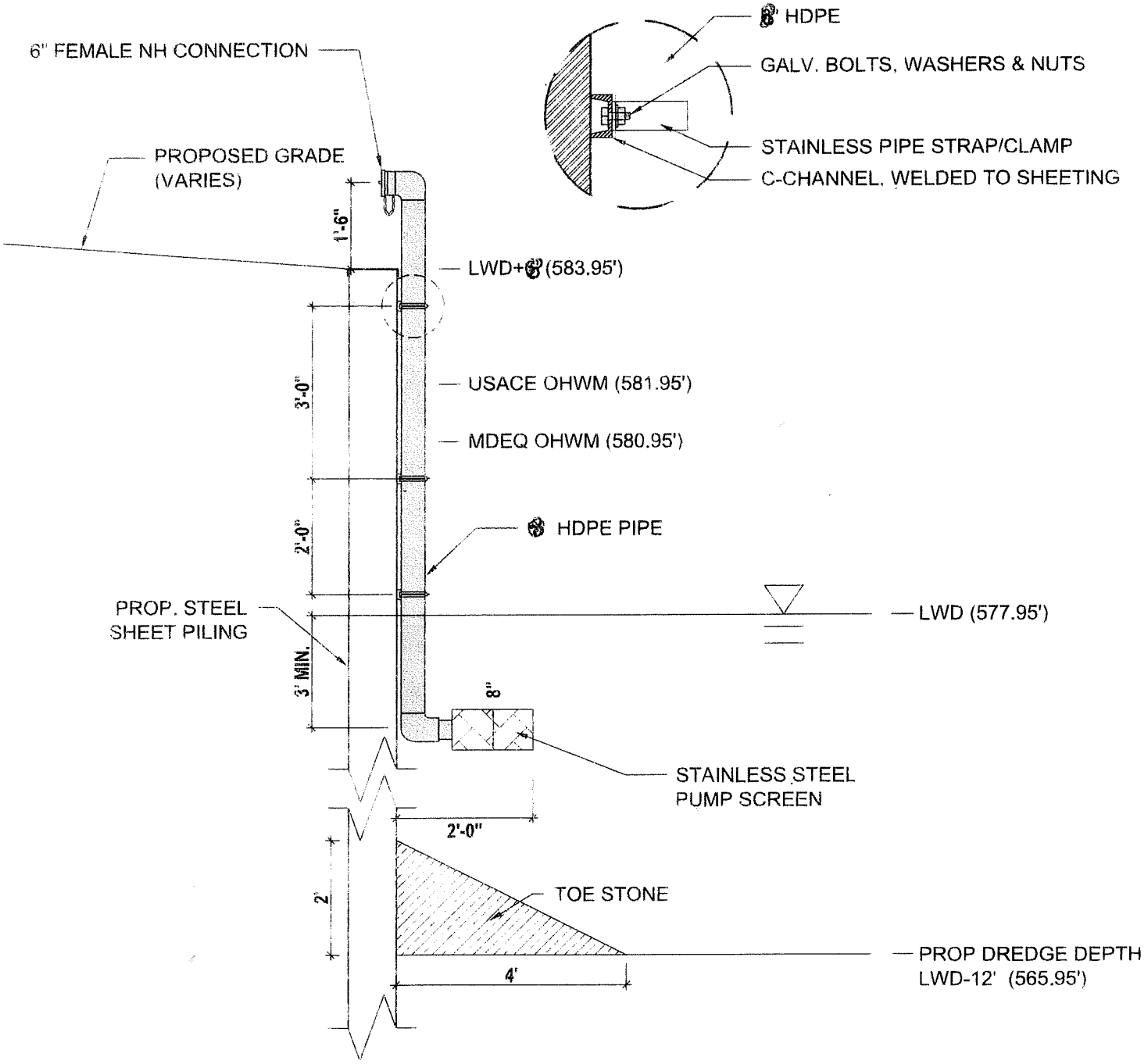

NOTES:

1. ALL ELEVATIONS IN RELATION TO NAVD88 DATUM
2. NAVD88 = IGLD85 +0.445'
3. BATHYMETRIC DEPTHS CORRELATE TO LWD = 577.948' (NAVD88)
4. BATHYMETRIC SURVEY INFORMATION COLLECTED ON MAY 19 2016 BY USACE

NTS

Edgewater resources
518 BROAD STREET, SUITE 200
ST. JOSEPH, MI 49085
P: 269 932 4502
F: 269 932 3542

STANDPIPE DETAIL

APPLICANT: NORTH SHORES OF SAUGATUCK, LLC
WATERWAY: KALAMAZOO RIVER
CITY: SAUGATUCK TOWNSHIP
COUNTY: ALLEGAN
DATE: 8/15/2017
DATUM: NAVD88

REVISED
SHEET: 14 OF 15

Received 7/16/18 - 17:07 - am

Drafting at 6” Dry Hydrants

Drafting Setup

- Need 4 lengths of hard suction. *(No other development in the Fire District’s coverage area require more than two hard suctions hoses)*
- Our engines carry two lengths in compliance with NFPA 1901.
- Pumping for 3 hours at maximum capacity utilized 7/8 tank of diesel fuel.

Terminology?

- FDC is the acronym for Fire Department Connection. FDC's are used to augment sprinkler systems, not draft water

- Standpipe – is typically a wet/dry pipe hose connection, supplying water to upper floors of a high-rise structure.

- What is at the site, but incorrectly labeled by the developer, are "Dry Hydrants."

- Signage shall be approved by the AHJ. This signage is incorrect and has not been approved. *(see examples of proper signage to right)*

Dry Hydrant – Engineer's Review

- The vertical riser pipe is called out as HDPE pipe. This plastic pipe will be subject to gouging from actions such as ice coupled with waves along with the potential for accidental boat strikes. Consider using stainless steel pipe instead.
- The construction of the "stainless steel pump screen" in the detail will restrict flow so the details of how this is constructed, and its size is important. The bigger the better. We suggest the devise be of woven wire construction instead of steel plate construction with holes drilled in it.
- The most likely failure mode is associated with foreign debris such as zebra mussels clogging or partially clogging the system. It could also take the form of trash such as a plastic bag that wraps itself around the intake screen or a fish, turtles, etc… Similarly, ice chunks coupled with wave action could damage the riser pipe and/or screen. We see maintenance, inspection and repair to be key factors in keeping these dry risers clean and ready for use.
- One final thought, there will always be a potential failure of these types of devices. For instance a perfectly clean dry riser could suck up a bag or a fish while in use that would restrict flow. However, the presence of any dry riser provides better protection than the lack of one.

Reasons we need an adequate water supply

- **Men, women, and children** are sleeping in these dwellings.
- 10-12-minute response time minimum
- Lightweight Type V construction, (essentially glue and sawdust).
- High wind exposures on the lakeshore
- Modern synthetic furnishings burn at a much faster rate and at much hotter temperatures, drastically reducing the amount of time to escape a residential structure fire.

Reasons we need an adequate water supply

- Large square feet structures exceeding 5,000 square feet
- Apparatus resource demands are excessive and unrealistic for a new development
- No automatic fire suppression sprinklers
- No hydrants, private fire service mains, pumps, or distribution system have been proposed by the current developer or owner
- Excessive hose lays

Time in Minutes

0 1 2 3 4 5 6 7 8 9 10 11 12 13 14 15 16 17 18 19 20 21 22 23 24 25 26 27 28 29 30 31 32 33 34 35 36 37 38 39 40 41 42 43 44 45

Fire Starts

Smoke Alarm Sounds

Men, Women, and Children wake up and get out

2-4 Minutes

911 Call is Made

&

Central Dispatch processes the call using standard protocol

3-5 Minutes

Crews Receive Page

Wake Up

Gear up

&

Depart Station

2-4 Minutes

Drive Time

for

1st Fire Attack Engine to get from

Fire Station

at 3342 Blue Star Highway

to 6736 Saugatuck Beach Road

This drive time may be further extended in adverse weather conditions

10-12 Minutes

Crews initiate fire attack

Onboard 650 Gallons of tank water is now empty and crews must halt firefighting operations

3-5 Minutes

2nd Engine Arrives

Begins laying 800 feet of 5" LDH from fire scene

back to Dry Hydrants and begins to establish water supply

This requires four 10 feet lengths of Hard suction

10-15 Minutes

Static Water Supply Timeline

Time in Minutes

0 1 2 3 4 5 6 7 8 9 10 11 12 13 14 15 16 17 18 19 20 21 22 23 24 25 26 27 28 29 30 31 32 33 34 35 36 37 38 39 40 41 42 43 44 45

Fire Starts

Smoke Alarm Sounds

Men, Women, and Children wake up and get out

2-4 Minutes

911 Call is Made

&

Central Dispatch processes the call using standard protocol

3-5 Minutes

Crews Receive Page

Wake Up

Gear up

&

Depart Station

2-4 Minutes

Drive Time

for

1st Fire Attack Engine to get from

Fire Station

at 3342 Blue Star Highway

to 6736 Saugatuck Beach Road

This drive time may be further extended in adverse weather conditions

10-12 Minutes

Crews initiate fire attack

Pressurized hydrant is dressed on way by

3-5 Minutes

Pressurized Hydrant is flushed, connected, and water begins flowing to fire attack engine

2-4 Minutes

This is the time that is wasted by not providing an adequate fire protection water supply for development

11+ Minutes

Pressurized Water Supply Timeline

Only the Fire Code Official can interpret the code

SECTION 104
GENERAL AUTHORITY AND RESPONSIBILITIES

[A] 104.1 General. The *fire code official* is hereby authorized to enforce the provisions of this code and shall have the authority to render interpretations of this code, and to adopt policies, procedures, rules and regulations in order to clarify the application of its provisions. Such interpretations, policies, procedures, rules and regulations shall be in compliance with the intent and purpose of this code and shall not have the effect of waiving requirements specifically provided for in this code.

2015 INTERNATIONAL FIRE CODE®

International Fire Code – 2015 Edition

507.1 Required water supply.

An approved water supply capable of supplying the required fire flow for fire protection shall be provided to premises upon which facilities, buildings or portions of buildings are here after constructed or moved into or within the jurisdiction.

507.5.1 Where required.

Where a portion of the facility or building hereafter constructed or moved into or within the jurisdiction is more than 400 feet (122 m) from a hydrant on a fire apparatus access road, as measured by an approved route around the exterior of the facility or building, on-site fire hydrants and mains shall be provided where required by the fire code official.

IFC Appendix B – Fire Flow Requirements

- Based on the approximate 6,300ft^2, the required fire flow is 2,250 GPM.
- We opted to give the benefit of doubt for 100 ft^2, and reduce it to the 4,801-6,200 square feet, thus the 2,000 GPM requirement

TABLE B105.1(2)
REFERENCE TABLE FOR TABLES B105.1(1) AND B105.2

FIRE-FLOW CALCULATION AREA (square feet)					FIRE-FLOW (gallons per minute)[b]	FLOW DURATION (hours)
Type IA and IB[a]	Type IIA and IIIA[a]	Type IV and V-A[a]	Type IIB and IIIB[a]	Type V-B[a]		
0-22,700	0-12,700	0-8,200	0-5,900	0-3,600	1,500	2
22,701-30,200	12,701-17,000	8,201-10,900	5,901-7,900	3,601-4,800	1,750	
30,201-38,700	17,001-21,800	10,901-12,900	7,901-9,800	4,801-6,200	2,000	
38,701-48,300	21,801-24,200	12,901-17,400	9,801-12,600	6,201-7,700	2,250	
48,301-59,000	24,201-33,200	17,401-21,300	12,601-15,400	7,701-9,400	2,500	
59,001-70,900	33,201-39,700	21,301-25,500	15,401-18,400	9,401-11,300	2,750	
70,901-83,700	39,701-47,100	25,501-30,100	18,401-21,800	11,301-13,400	3,000	3
83,701-97,700	47,101-54,900	30,101-35,200	21,801-25,900	13,401-15,600	3,250	
97,701-112,700	54,901-63,400	35,201-40,600	25,901-29,300	15,601-18,000	3,500	
112,701-128,700	63,401-72,400	40,601-46,400	29,301-33,500	18,001-20,600	3,750	
128,701-145,900	72,401-82,100	46,401-52,500	33,501-37,900	20,601-23,300	4,000	4
145,901-164,200	82,101-92,400	52,501-59,100	37,901-42,700	23,301-26,300	4,250	
164,201-183,400	92,401-103,100	59,101-66,000	42,701-47,700	26,301-29,300	4,500	
183,401-203,700	103,101-114,600	66,001-73,300	47,701-53,000	29,301-32,600	4,750	
203,701-225,200	114,601-126,700	73,301-81,100	53,001-58,600	32,601-36,000	5,000	
225,201-247,700	126,701-139,400	81,101-89,200	58,601-65,400	36,001-39,600	5,250	
247,701-271,200	139,401-152,600	89,201-97,700	65,401-70,600	39,601-43,400	5,500	
271,201-295,900	152,601-166,500	97,701-106,500	70,601-77,000	43,401-47,400	5,750	
295,901-Greater	166,501-Greater	106,501-115,800	77,001-83,700	47,401-51,500	6,000	
—	—	115,801-125,500	83,701-90,600	51,501-55,700	6,250	
—	—	125,501-135,500	90,601-97,900	55,701-60,200	6,500	
—	—	135,501-145,800	97,901-106,800	60,201-64,800	6,750	
—	—	145,801-156,700	106,801-113,200	64,801-69,600	7,000	
—	—	156,701-167,900	113,201-121,300	69,601-74,600	7,250	
—	—	167,901-179,400	121,301-129,600	74,601-79,800	7,500	
—	—	179,401-191,400	129,601-138,300	79,801-85,100	7,750	
—	—	191,401-Greater	138,301-Greater	85,101-Greater	8,000	

IFC Appendix B – Fire Flow Requirements

IFC B103.3 Areas without water supply systems.

For information regarding water supplies for fire-fighting purposes in rural and suburban areas in which adequate and reliable water supply systems do not exist, the fire code official is authorized to utilize NFPA 1142 or the International Wildland-Urban Interface Code.

Plan Reviewer Comments

As the AHJ, we determined that the NFPA 1142 standard does not apply as an adequate and reliable water supply exists; ie: Lake Michigan, the Kalamazoo River and the dry hydrants. The issue here is the distance from the dry hydrants exceeding 400 feet to the proposed home at 6736 Saugatuck Beach Road

IFC Appendix B – Fire Flow Requirements

- Only the Fire Chief, not the developer or their legal counsel, has the right to increase or decrease the fire flow requirements

SECTION B103
MODIFICATIONS

B103.1 Decreases. The fire chief is authorized to reduce the fire-flow requirements for isolated buildings or a group of buildings in rural areas or small communities where the development of full fire-flow requirements is impractical.

B103.2 Increases. The fire chief is authorized to increase the fire-flow requirements where conditions indicate an unusual susceptibility to group fires or conflagrations. An increase shall not be more than twice that required for the building under consideration.

2015 INTERNATIONAL FIRE CODE®

Insurance Services Office (ISO)

- March 15th, 2018
  - Chief Greg Janik had a conference call with ISO field representatives and field supervisors
  - Due to size of buildings, ISO considered homes commercial
  - PPC rating for the District may be adversely affected
  - ISO considers these homes “McMansions”
  - ISO recommended fire flow of 2,200-2,500 GPM based on the size of the dwellings in the development

Does NFPA 1142 Apply?

NFPA 1142 – 1.1.1 – Scope

This standard identifies a method of determining the minimum requirements for alternative water supplies for structural fire-fighting purposes in areas where the authority having jurisdiction (AHJ) determines that adequate and reliable water supply systems for fire-fighting purposes do not otherwise exist.

Plan Reviewer Comments

As the **AHJ,** we determined that the NFPA 1142 standard **does not apply** as an adequate and reliable water supply exists, Lake Michigan and the Kalamazoo River.

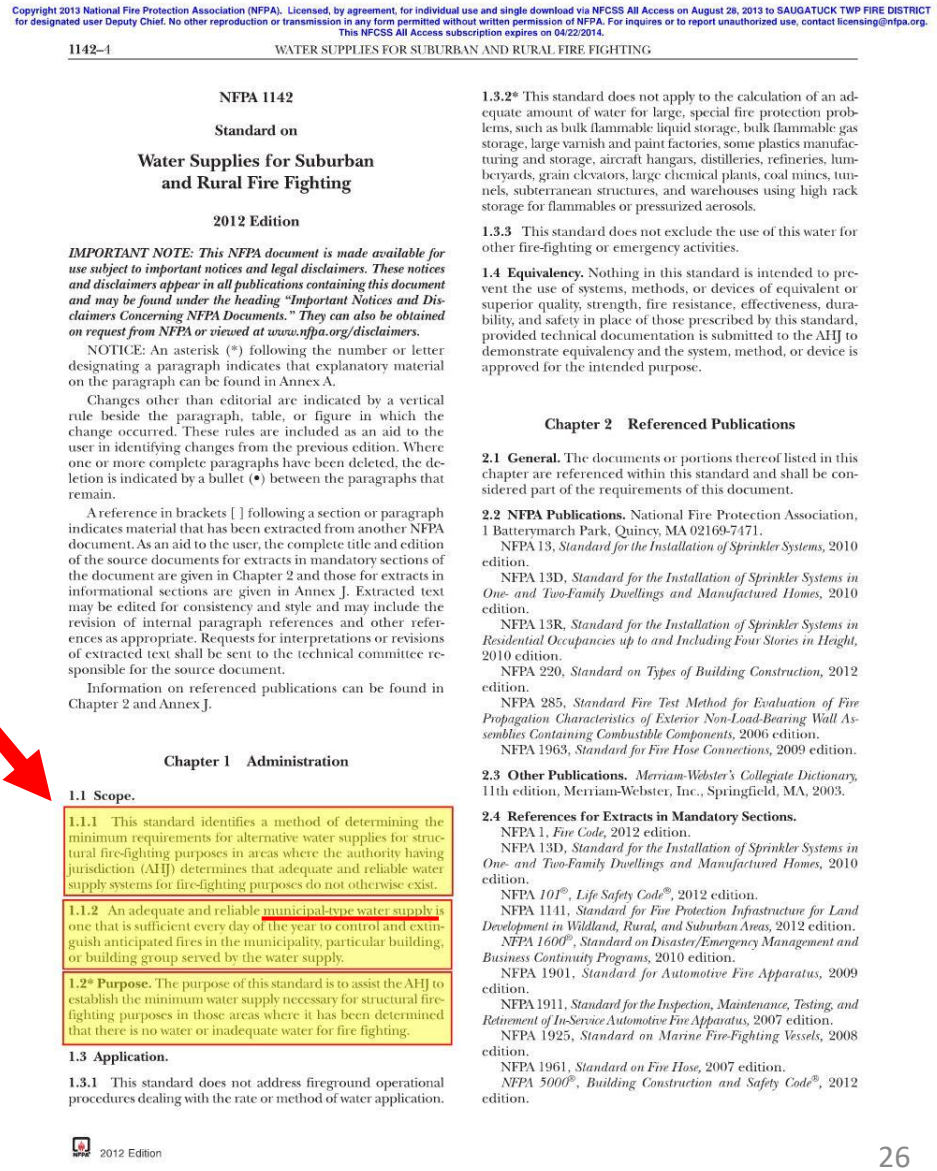

NFPA 1142

Standard on

Water Supplies for Suburban and Rural Fire Fighting

2012 Edition

IMPORTANT NOTE: This NFPA document is made available for use subject to important notices and legal disclaimers. These notices and disclaimers appear in all publications containing this document and may be found under the heading "Important Notices and Disclaimers Concerning NFPA Documents." They can also be obtained on request from NFPA or viewed at www.nfpa.org/disclaimers.

NOTICE: An asterisk (*) following the number or letter designating a paragraph indicates that explanatory material on the paragraph can be found in Annex A.

Changes other than editorial are indicated by a vertical rule beside the paragraph, table, or figure in which the change occurred. These rules are included as an aid to the user in identifying changes from the previous edition. Where one or more complete paragraphs have been deleted, the deletion is indicated by a bullet (•) between the paragraphs that remain.

A reference in brackets [ ] following a section or paragraph indicates material that has been extracted from another NFPA document. As an aid to the user, the complete title and edition of the source documents for extracts in mandatory sections of the document are given in Chapter 2 and those for extracts in informational sections are given in Annex J. Extracted text may be edited for consistency and style and may include the revision of internal paragraph references and other references as appropriate. Requests for interpretations or revisions of extracted text shall be sent to the technical committee responsible for the source document.

Information on referenced publications can be found in Chapter 2 and Annex J.

Chapter 1 Administration

1.1 Scope.

1.1.1 This standard identifies a method of determining the minimum requirements for alternative water supplies for structural fire-fighting purposes in areas where the authority having jurisdiction (AHJ) determines that adequate and reliable water supply systems for fire-fighting purposes do not otherwise exist.

1.1.2 An adequate and reliable municipal-type water supply is one that is sufficient every day of the year to control and extinguish anticipated fires in the municipality, particular building, or building group served by the water supply.

1.2* Purpose. The purpose of this standard is to assist the AHJ to establish the minimum water supply necessary for structural fire-fighting purposes in those areas where it has been determined that there is no water or inadequate water for fire fighting.

1.3 Application.

1.3.1 This standard does not address fireground operational procedures dealing with the rate or method of water application.

1.3.2* This standard does not apply to the calculation of an adequate amount of water for large, special fire protection problems, such as bulk flammable liquid storage, bulk flammable gas storage, large varnish and paint factories, some plastics manufacturing and storage, aircraft hangars, distilleries, refineries, lumberyards, grain elevators, large chemical plants, coal mines, tunnels, subterranean structures, and warehouses using high rack storage for flammables or pressurized aerosols.

1.3.3 This standard does not exclude the use of this water for other fire-fighting or emergency activities.

1.4 Equivalency. Nothing in this standard is intended to prevent the use of systems, methods, or devices of equivalent or superior quality, strength, fire resistance, effectiveness, durability, and safety in place of those prescribed by this standard, provided technical documentation is submitted to the AHJ to demonstrate equivalency and the system, method, or device is approved for the intended purpose.

Chapter 2 Referenced Publications

2.1 General. The documents or portions thereof listed in this chapter are referenced within this standard and shall be considered part of the requirements of this document.

2.2 NFPA Publications. National Fire Protection Association, 1 Batterymarch Park, Quincy, MA 02169-7471.

NFPA 13, *Standard for the Installation of Sprinkler Systems*, 2010 edition.

NFPA 13D, *Standard for the Installation of Sprinkler Systems in One- and Two-Family Dwellings and Manufactured Homes*, 2010 edition.

NFPA 13R, *Standard for the Installation of Sprinkler Systems in Residential Occupancies up to and Including Four Stories in Height*, 2010 edition.

NFPA 220, *Standard on Types of Building Construction*, 2012 edition.

NFPA 285, *Standard Fire Test Method for Evaluation of Fire Propagation Characteristics of Exterior Non-Load-Bearing Wall Assemblies Containing Combustible Components*, 2006 edition.

NFPA 1963, *Standard for Fire Hose Connections*, 2009 edition.

2.3 Other Publications. *Merriam-Webster's Collegiate Dictionary*, 11th edition, Merriam-Webster, Inc., Springfield, MA, 2003.

2.4 References for Extracts in Mandatory Sections.

NFPA 1, *Fire Code*, 2012 edition.

NFPA 13D, *Standard for the Installation of Sprinkler Systems in One- and Two-Family Dwellings and Manufactured Homes*, 2010 edition.

NFPA *101®*, *Life Safety Code®*, 2012 edition.

NFPA 1141, *Standard for Fire Protection Infrastructure for Land Development in Wildland, Rural, and Suburban Areas*, 2012 edition.

NFPA 1600®, *Standard on Disaster/Emergency Management and Business Continuity Programs*, 2010 edition.

NFPA 1901, *Standard for Automotive Fire Apparatus*, 2009 edition.

NFPA 1911, *Standard for the Inspection, Maintenance, Testing, and Retirement of In-Service Automotive Fire Apparatus*, 2007 edition.

NFPA 1925, *Standard on Marine Fire-Fighting Vessels*, 2008 edition.

NFPA 1961, *Standard on Fire Hose*, 2007 edition.

NFPA 5000®, *Building Construction and Safety Code®*, 2012 edition.

Even if NFPA 1142 was applicable…

4.1.3* The minimum requirements shall be subject to increase by the AHJ to compensate for particular conditions such as the following:

(1) Limited fire department resources
(2) Extended fire department response time or distance
(3) Potential for delayed discovery of the fire
(4) Limited access
(5) Hazardous vegetation
(6) Structural attachments, such as decks and porches
(7) Unusual terrain
(8) Special uses and unusual occupancies

NFPA 1142

Standard on

Water Supplies for Suburban and Rural Fire Fighting

2012 Edition

It is still up to the AHJ to determine their needs for Fire Protection Water Supplies

Developer Funded Watermain Extensions

57 developers have installed a total of **82,480 Feet** of Developer Funded Watermain Extensions within the Fire District tri-community coverage area.

(Based on information available to Fire District)

Douglas City	
Development	**Length in Feet**
Westshore Woods	1175
Busscher Construction	500
Summer Grove	2510
Parkside Landing	1320
Saugatuck Storage	800
Wilderness Ridge	3192
Northern Lights	1545
Swing Bridge	665
Harbor View	1395
Douglas Elementary	800
Cider Hill	475
Harbor Lake Rd.	1155
301-307 Wiley Rd.	180
Douglas Prof. Center	300
Harbors Apartments	300
Amity St.	1170
Wildwood	715
Singapore Court	350
Westshore Golf Course	2700
Tower Marine Storage	150
Mariners Cove	920
Golf View Drive	1225
Meadow Argus	2450
Enterprise Drive	1000
	26,992.00

Saugatuck City	
Development	**Length in Feet**
Dune Grass	5700
Dune Grass River docks	20
807 Lake St.	150
Saugatuck Townhomes	150
Saugatuck High School	970
Bayview Condos	525
Ridge View Lane	800
Old Mill Heights	300
Ridgewood Oaks	595
Singapore Trail	600
Wyrick	250
Eastshore Condos	1140
	11,200.00

Saugatuck Township	
Development	**Length in Feet**
Lakeshore Outfitters	20
Ravines Golf Course	16551
Hidden Dunes	992
Kingfischer Cove	2105
Northgate Mall	300
Sanctuary Way	1876
Old Singapore Trail	1200
Gaslight Estates	3625
Maple Green	280
Maple Gate	2069
Oxbow	2125
Southgate (exit 36)	1840
Hawthorne Court	2376
Timber Ridge Trail	1708
Lake Trail	1520
Old Walnut Lane	20
Clearbrook Court	510
Sambroek Lane	1740
Coppice Court	366
Eagle Ridge	1275
Beach Trail	290
BuildSB/Northshores	1500
	44,288.00

Total between all 3 Municipalities	**82,480.00**

Similarly-Situated Property
Dunegrass, the Preserve at the Lakeshore

Northshores of Saugatuck
6736 Saugatuck Beach Rd.
(Lot 15)

Dunegrass, the Preserve at the Lakeshore

Developer installed over 5,000 feet of fire service mains

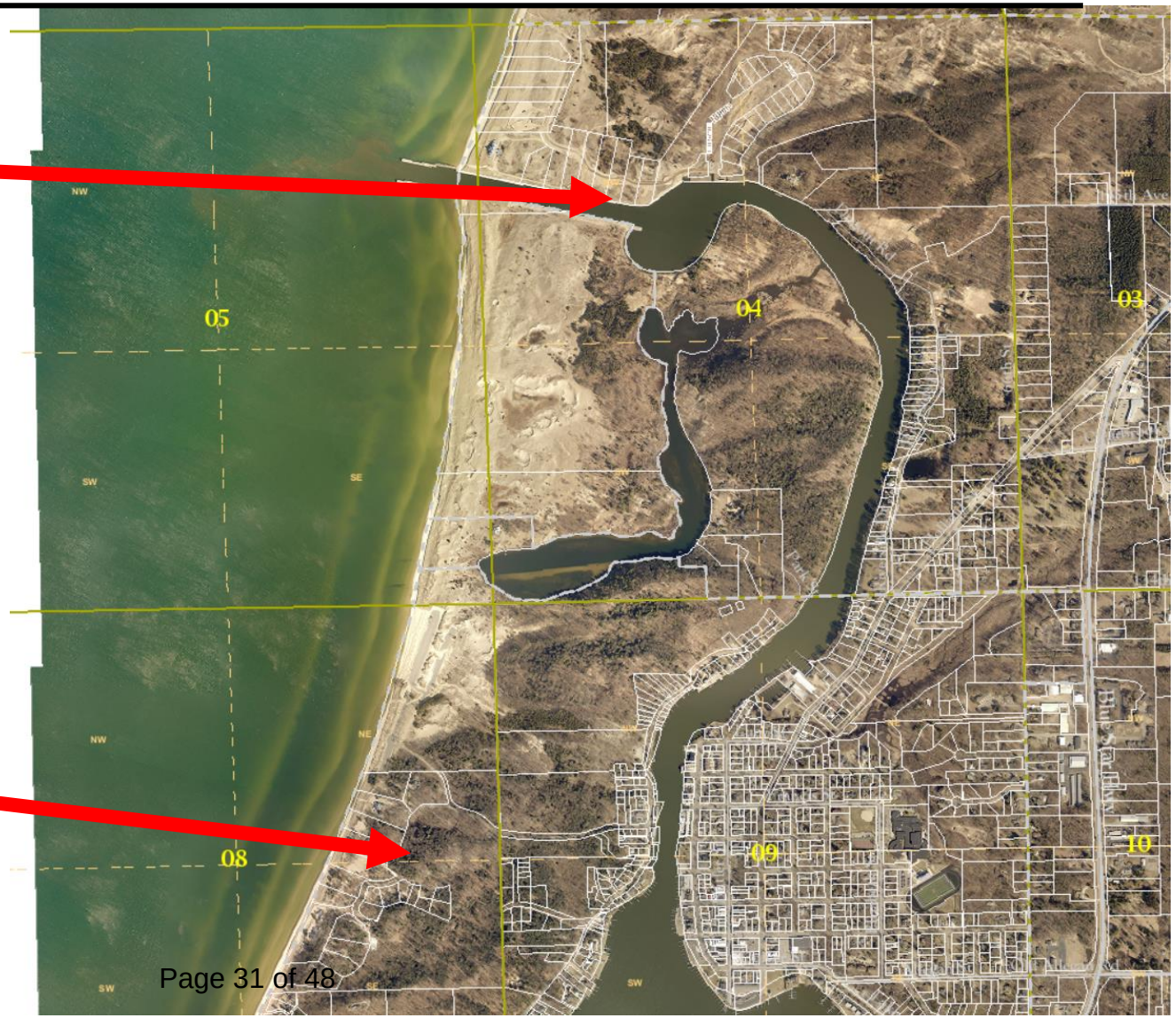

Similarly-Situated Property

Dunegrass, the Preserve at the Lakeshore

Developer ran over 5,000 feet of Fire Service Mains

Every home in the Dunegrass development has a hydrant within 600 feet, as they followed the exemption under IFC 507.5.1 to extend from 400 feet to 600 feet due to installation of equivalent method by providing automatic fire sprinkler systems in all dwellings in accordance with NFPA 13D

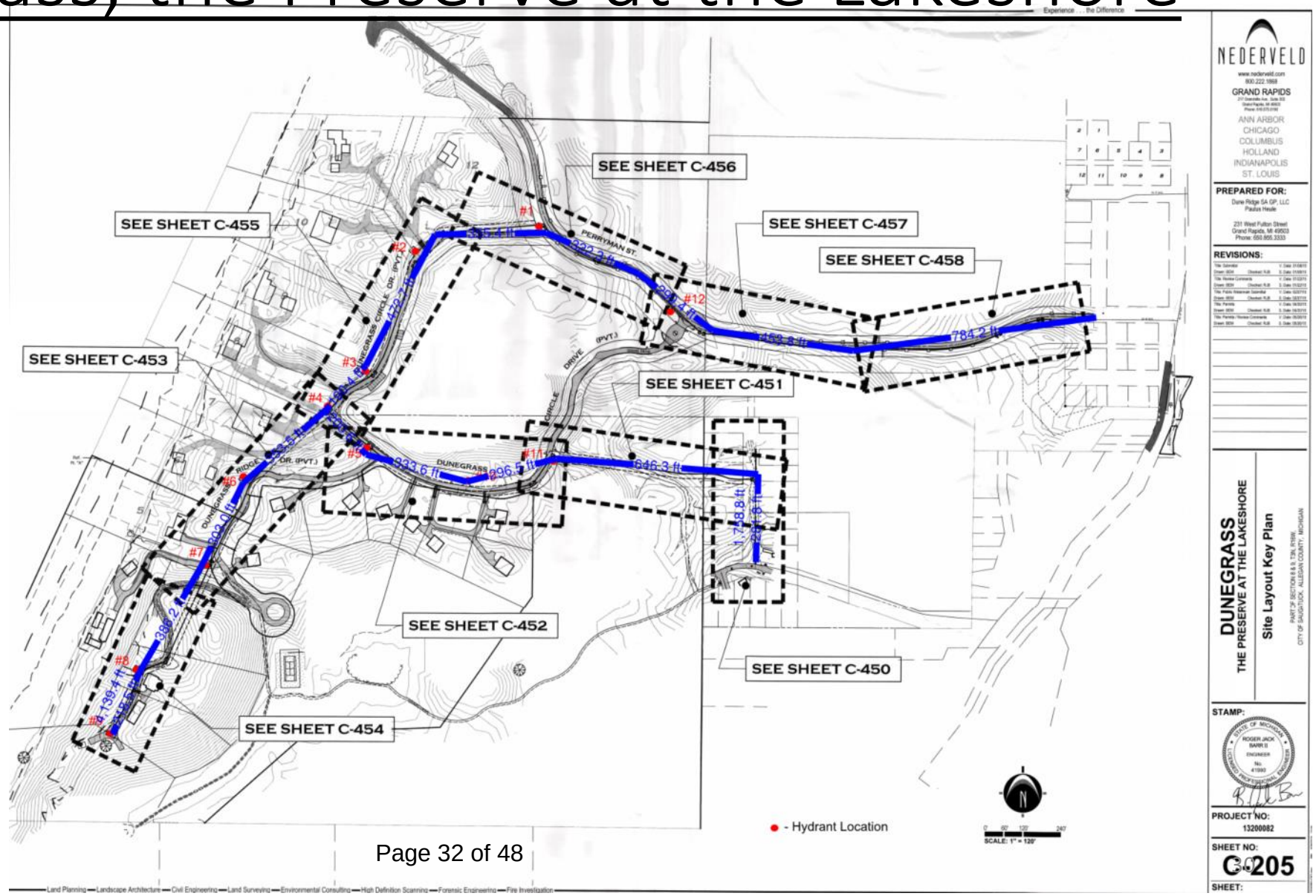

Calculations are not an exact science…

- At a recent structure fire in the Township:
  - The dwelling was approx. 5,398 square feet
  - Only 810 square feet of the garage & bonus room was on fire upon arrival of first due engine at eight minutes from dispatch.
  - There was a hydrant in the front lawn of the dwelling
  - It took 8,900 gallons of water to extinguish the garage and bonus room fire due to modern construction and synthetic furnishings
  - The developer's legal counsel believes that 9,861 gallons is enough to extinguish the 6,300 square feet home on Lot 15.

Rural or Not?

- If in fact the Northshores of Saugatuck is rural:
  - Why did they run thousands of feet of natural gas line, at enormous expense, instead of using propane tanks?
  - Why did they run thousands of feet of communication lines for internet/tv, instead of using satellites?

- In our opinion, it appears the developer only wants to use the word "rural" when it is for their benefit

Development Costs

- Why should the taxpayer-funded fire engines, be utilized to provide the water supply for development?
- Whether public or private fire service mains, isn't that the cost of doing business and developing a property?
- Similar to installing electric, cable, internet, and natural gas utilities, wouldn't fire service mains be part of the infrastructure costs that should have been budgeted by the developer?
- What other development has been permitted to utilize the Fire Districts water tenders, and large diameter hose, to qualify for their fire protection water supply?

Dunegrass Developer Comments

- When asked about their feelings on installing fire protection water mains in a new development, the Dunegrass developer offered the following comment(s):

"Considering the magnitude of the development, the investment is easily justified."

July 2007 – Lakeshore Fire

- Location was just over 2 miles North of the proposed home at 6736 Saugatuck Beach Road
- Fire burned for over 12 hours
- Destroyed 3 homes and over 50 acres of woods/sand dunes
- Took over 100 personnel, from 18 departments, and an estimated 1 million gallons of water to extinguish

July 2007 – Lakeshore Fire

Consent Judgement

- Per the Terms of the Consent Judgement and Final Order, the Township is prohibited from treating the Plaintiff's property differently than similarly-situated properties within the Township without a rational basis for doing so.

"The consent decree prohibits the Township from treating the NorthShore property differently than others," the lawyer said. "It also man-

- If we were to make an exception to allow the development to continue without an approved fire protection water supply, it would violate the terms of the Consent Judgement by treating the property differently.

Why did the Dunegrass (similarly-situated) development have to install water mains and fire hydrants, but not Northshores of Saugatuck?

Consent Judgement

Terms of Consent Judgment

c) requiring, under Sec. 40-658(e) of the Township Zoning Ordinance, two means of access to Plaintiff's Property from an adjacent public street, provided that Plaintiff otherwise implements alternative safety requirements, as reasonably imposed by the Township, such as a standpipe system or the equivalent for emergency water needs, the use of sprinkler systems in any non-residential buildings and any buildings containing more than four dwelling units, the designation of a space along the Kalamazoo River adjacent to Plaintiff's Property for the exclusive use of a fireboat, and the designation of an emergency landing area for helicopters.

2012 Plan - IFC Compliant Roads and Water Supply

A new community fire suppression water supply system is proposed for the 25 new single-family lots within Phase 1 of the proposed development and the adjacent existing single family home site. This system will consist of a groundwater supplied well, a vertical turbine fire pump(s), a pressure tank and a looped fire protection water main with fire hydrants distributed at a maximum spacing of 400feet along the roads serving single-family homes. The pump will be served with primary power from a new underground CMS Energy electric service line and a backup emergency generator served from a new CMS Energy natural gas service line. The systems will be owned, operated and maintained by the proposed community association. This fire protection system will be designed to deliver the full fire flows with the minimum residual pressures to any hydrant or combination of hydrants in accordance with the International Fire Code.

SMITHGROUP JJR

December 10, 2012
(Revised December 13, 2012)

Ms. Lori Nash
Fire Inspector
Saugatuck Township Fire District
3342 Blue Star Highway
Saugatuck, MI 49453

Re: Phase 1 Singapore Dunes Development
Fire Safety Requirements

Dear Ms. Nash:

Thank you for taking the time to meet with us at the fire station regarding fire safety requirements for the proposed Phase 1 Singapore Dunes Development and to walk the site along the proposed road alignments. As you noted, the proposed road alignment will provide significantly improved access for fire safety apparatus to the proposed development.

All access roads will be in compliance with the International Fire Code. All roads will consist of a 20-foot wide hot mix asphalt (HMA) pavement. All roads will have either mountable curb and gutters, stabilized aggregate shoulders or a combination of these treatments to provide a full 26-foot usable roadway width to allow for passing vehicles during emergencies. The HMA pavement, the mountable curb and gutter and the stabilized aggregate shoulders will be designed to support a 75,000 pound fire apparatus and will be maintained and snow-plowed by the proposed community association for full winter access and fire safety use.

A new community fire suppression water supply system is proposed for the 25 new single-family lots within Phase 1 of the proposed development and the adjacent existing single family home site. This system will consist of a groundwater supplied well, a vertical turbine fire pump(s), a pressure tank and a looped fire protection water main with fire hydrants distributed at a maximum spacing of 400feet along the roads serving single-family homes. The pump will be served with primary power from a new underground CMS Energy electric service line and a backup emergency generator served from a new CMS Energy natural gas service line. The systems will be owned, operated and maintained by the proposed community association. This fire protection system will be designed to deliver the full fire flows with the minimum residual pressures to any hydrant or combination of hydrants in accordance with the International Fire Code.

Sincerely,

Bernard J. Fekete, PE
Principal

cc: James Bruinsma, Myers, Nelson, Dillon & Shierk, PLLC
Hank Byma, SmithGroupJJR

p:\2\7301000\admin\communications\letter\lr 2012 1210 nash_rev 12.13.12 nash.docx

SMITHGROUP JJR 201 DEPOT STREET, 2ND FLOOR, ANN ARBOR, MI 48104 T 734.662.4457 F 734.662.2520

The original developer, attorney, and engineers, hired by the previous property owner, planned to do the project in accordance with the IFC, based on submittals to the Fire District from 12/10/2012.
This was AFTER the consent judgment was executed by Chief Judge Paul Maloney on 6/11/2012.

SMITHGROUPJJR

December 10, 2012
(Revised December 13, 2012)

Ms. Lori Nash
Fire Inspector
Saugatuck Township Fire District
3342 Blue Star Highway
Saugatuck, MI 49453

Re: Phase 1 Singapore Dunes Development
Fire Safety Requirements

Dear Ms. Nash:

Thank you for taking the time to meet with us at the fire station regarding fire safety requirements for the proposed Phase 1 Singapore Dunes Development and to walk the site along the proposed road alignments. As you noted, the proposed road alignment will provide significantly improved access for fire safety apparatus to the proposed development.

All access roads will be in compliance with the International Fire Code. All roads will consist of a 20-foot wide hot mix asphalt (HMA) pavement. All roads will have either mountable curb and gutters, stabilized aggregate shoulders or a combination of these treatments to provide a full 26-foot usable roadway width to allow for passing vehicles during emergencies. The HMA pavement, the mountable curb and gutter and the stabilized aggregate shoulders will be designed to support a 75,000 pound fire apparatus and will be maintained and snow-plowed by the proposed community association for full winter access and fire safety use.

A new community fire suppression water supply system is proposed for the 25 new single-family lots within Phase 1 of the proposed development and the adjacent existing single family home site. This system will consist of a groundwater supplied well, a vertical turbine fire pump(s), a pressure tank and a looped fire protection water main with fire hydrants distributed at a maximum spacing of 400feet along the roads serving single-family homes. The pump will be served with primary power from a new underground CMS Energy electric service line and a backup emergency generator served from a new CMS Energy natural gas service line. The systems will be owned, operated and maintained by the proposed community association. This fire protection system will be designed to deliver the full fire flows with the minimum residual pressures to any hydrant or combination of hydrants in accordance with the International Fire Code.

Sincerely,

Bernie Fekete

Bernard J. Fekete, PE
Principal

cc: James Bruinsma, Myers, Nelson, Dillon & Shierk, PLLC
Hank Byma, SmithGroupJJR

p:\24730\000\admin\communications\letter\ltr 2012 1210 nash_rev 12.13.12 nash.docx

SMITHGROUPJJR 201 DEPOT STREET, 2ND FLOOR, ANN ARBOR, MI 48104 T 734.662.4457 F 734.662.7520

Fire District Legal Counsel Comments

- IFC is a Code, NFPA are guidelines; not the same thing
- Even under NFPA it is left to decisionmaker (AHJ) to determine if an "adequate" water supply is available or not. So long as the AHJ has a reasonable basis for that decision that should end the review (at least legally)
- Hydrant distance is based on IFC which is the applicable Code (see above)
- ***All*** of the developer's attorneys' arguments presume that NFPA 1142 and not IFC should be the basis for the Board's decision; which is not correct
- Nothing in the developer's attorneys' submittal states why hydrants cannot be extended

The Developer Offered:

During a site visit/meeting on 11/22/2019, Mr. Scott Bosgraff offered:

1. To install two 8” dry hydrants within 400 feet of the home at 6736 Saugatuck Beach Road
2. To install additional sets of dry hydrants every 400 feet down the seawall through the channel to Lake Michigan.
3. To provide verification from the Northshores engineer that the 10 feet wide “river-side water supply access lane” would support the weight of our apparatus.

What alternatives have been offered?

- None

- If the developer, or property owner were to suggest some alternative fire safety features such as fire sprinkler suppression systems, it would allow the fire code official to consider the increasing the 400 feet distance from the hydrant(s) to the proposed dwelling

Our Position

It is our position that we did not misinterpret the code, there has not been an equivalent method of protection proposed, and the provisions of the IFC do fully apply. Only by following the code, can our firefighters ensure we can provide a reasonable level of safety and property protection from the hazards of fire, explosion or dangerous conditions.

Fire District's Viable Solution

Taking all factors into account, the Saugatuck Township Fire District has concluded that the community of Northshores of Saugatuck, and its residents, are inadequately protected from fire danger. It is the recommendation of the Fire District that the community would be best served by installing a UL Listed Fire Pump, fire protection mains, and hydrants within 400 feet of every dwelling in the Northshores of Saugatuck development as proposed by the original developer, in submittals by Smith Group LLC from 12/10/2012

THANK YOU

We greatly appreciate all of the hours Board of Appeals members have committed to hearing our case, and protecting our citizens, and the Fire District's most valuable asset, our personnel.

References

1. International Fire Code – 2015 Edition
2. The Commercial Record Newspaper – 1/9/2020
3. National Fire Protection Association (NFPA) 1142 – 2012 Edition
4. National Fire Protection Association (NFPA) 1901 – 2016 Edition
5. Case 1:10-cv-00210-PLM Doc #199 Filed 06/11/12 Page 6 of 22 Page ID#2560
6. SmithGroupJJR, December 10, 2012 Letter, re: Phase 1 Singapore Dunes Development Fire Safety Requirements